17/01/23:
Balance Loop by Prasanna Seshadri
Theme: No Numbers

Rules: Draw a single, non-intersecting loop that passes through all circled cells. All white circles must have equal segment lengths on both sides of the circle before turning. All black circles must have unequal segment lengths on both sides of the circle before turning. Numbers indicate the sum of the segment lengths on both sides of the circle.
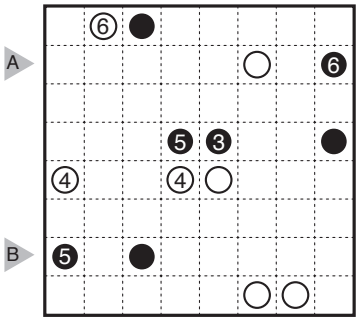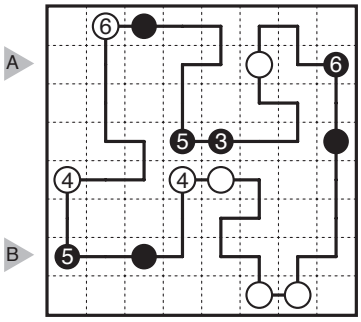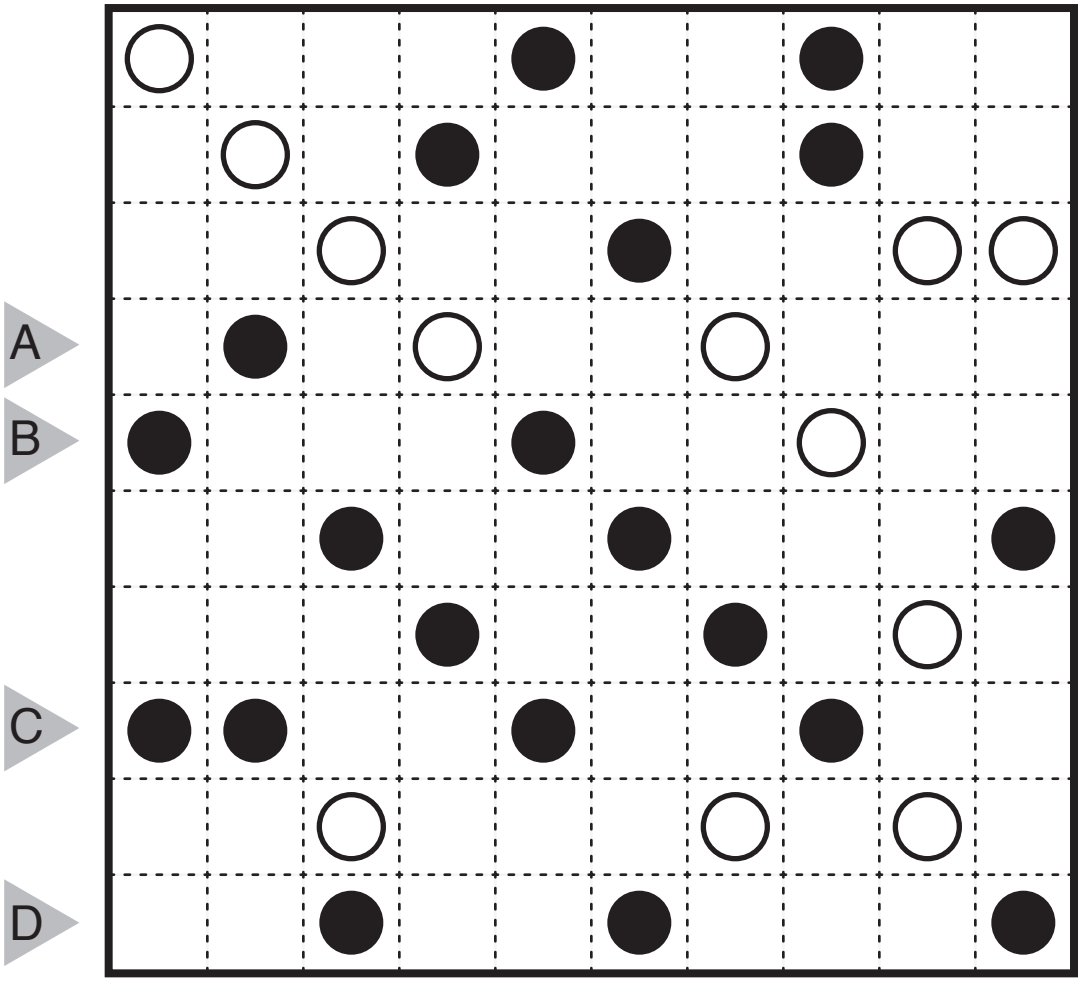
Answer Entry: Enter the length in cells of the horizontal loop segments from left to right in the marked rows, starting at the top. Separate each row's entry with a comma. This example has the key "11,311".